AN3248NK

Luminance Signal Processor IC for VCR

■ Overview

The AN3248NK is a single-chip VCR luminance-signal processing IC. All the functions required for VCR luminance signal processing are integrated in it, and great rationalization of external parts and number of pins are achieved by incorporated filters.

■ Features

- Adjustment-free dark clip.
- Incorporates the filters for non-linear emphasis, noise canceler and detail enhancer to rationalize greatly the external parts and to reduce the number of pins.

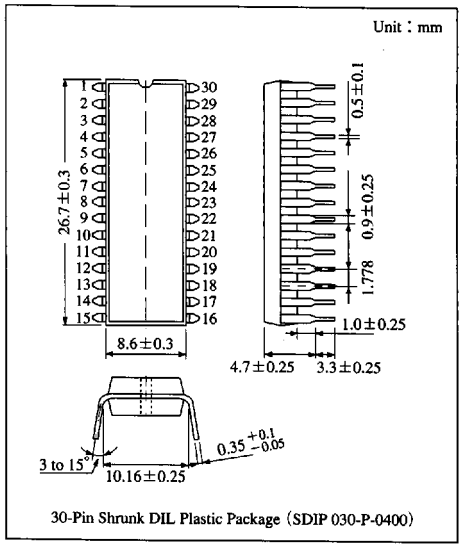

30-Pin Shrunk DIL Plastic Package (SDIP 030-P-0400)
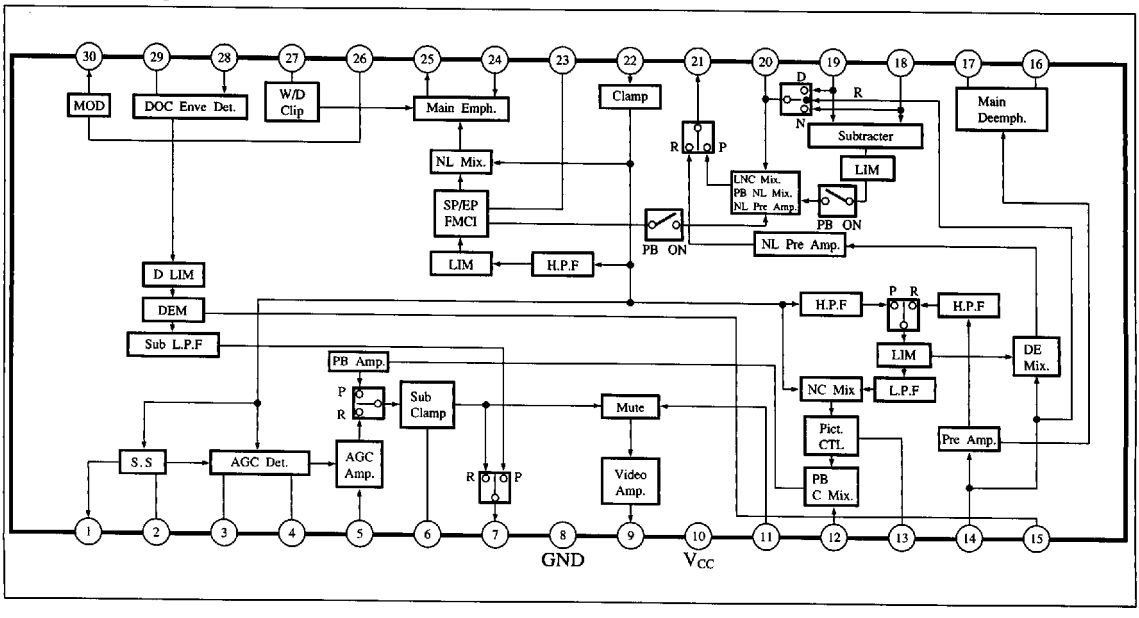
■ Block Diagram